Karadeniz Teknik Üniversitesi

Engineering Faculty
Mining Engineering Department

MINE1000-DYNAMICS

Week 5:
Kinetics of a Particle: Work and Energy

Dr. Serdar YAŞAR

Course Content

Week	Date	Course Content
1		Warming up, general introduction to dynamics
2		Kinematics of a particle
3		Kinematics of a particle
4		Kinetics of a particle: Force & acceleration
5		Kinetics of a particle: Work & energy
6		Kinetics of a particle: Impulse & momentum
7		General review & problem solving
9		Kinematics of a rigid body
10		Kinematics of a rigid body
11		Kinetics of a rigid body: Force & acceleration
12		Kinetics of a rigid body: Work & energy
13		Kinetics of a rigid body: Impulse & momentum
14		General review & problem solving

Kinetics: Work & Energy

The work of a force

A force F will do work on a particle only when the particle undergoes a displacement in the direction of the force.

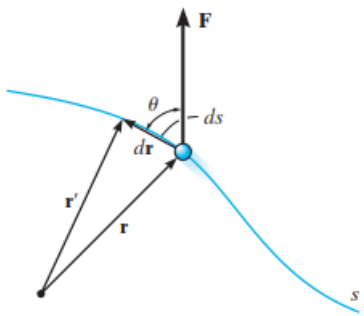

$$dU = F\,ds\cos\theta$$

$$dU = \mathbf{F}\cdot d\mathbf{r}$$

Kinetics: Work & Energy

The work of a force

The unit of work in SI units is the joule (J), which is the amount of work done by a one-newton force when it moves through a distance of one meter in the direction of the force (1 J = 1 N.m).

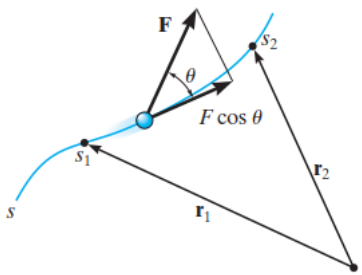

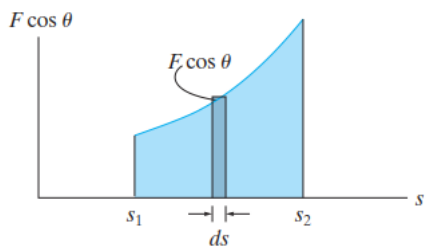

$$U_{1-2} = \int_{\mathbf{r}_1}^{\mathbf{r}_2} \mathbf{F} \cdot d\mathbf{r} = \int_{s_1}^{s_2} F \cos\theta \, ds$$

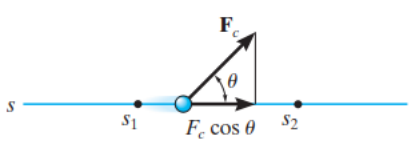

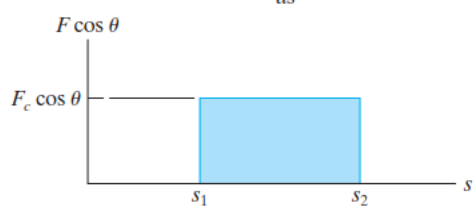

$$U_{1-2} = F_c \cos\theta \int_{s_1}^{s_2} ds$$

$$U_{1-2} = F_c \cos\theta (s_2 - s_1)$$

Kinetics: Work & Energy

The work of a weight

Consider a particle of weight W, which movesup along the path s from position s1 to position s2.

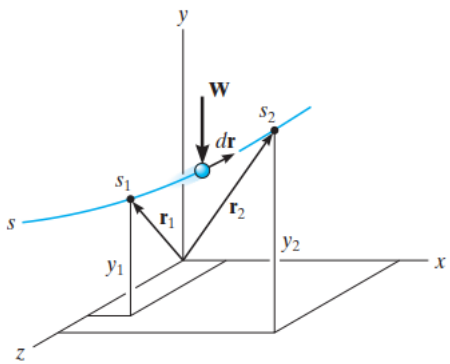

$$U_{1-2} = \int \mathbf{F} \cdot d\mathbf{r} = \int_{\mathbf{r}_1}^{\mathbf{r}_2} (-W\mathbf{j}) \cdot (dx\mathbf{i} + dy\mathbf{j} + dz\mathbf{k})$$

$$= \int_{y_1}^{y_2} -W\, dy = -W(y_2 - y_1)$$

$$\boxed{U_{1-2} = -W\, \Delta y}$$

Thus, the work is independent of the path and is equal to the magnitude of the particle's weight times its vertical displacement.

Kinetics: Work & Energy

The work of a spring

If an elastic spring is elongated a distance ds, This work is negative since Fs acts in the opposite sense to ds. If the particle displaces from to , the work of is then

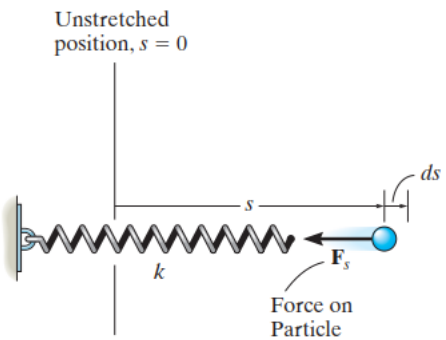

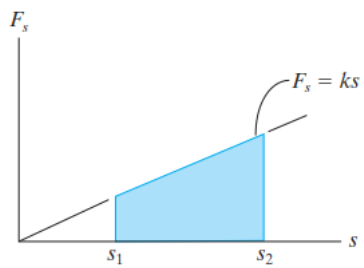

$$U_{1-2} = \int_{s_1}^{s_2} F_s\, ds = \int_{s_1}^{s_2} -ks\, ds$$

$$\boxed{U_{1-2} = -\left(\tfrac{1}{2}ks_2^2 - \tfrac{1}{2}ks_1^2\right)}$$

A mistake in sign can be avoided when applying this equation if one simply notes the direction of the spring force acting on the particle and compares it with the sense of direction of displacement of the particle if both are in the same sense, positive work results; if they are opposite to one another, the work is negative.

Kinetics: Work & Energy

Numerical Example:

The 10-kg block rests on the smooth incline. If the spring is originally stretched 0.5 m, determine the total work done by all the forces acting on the block when a horizontal force P = 400 N pushes the block up the plane s = 2 m.

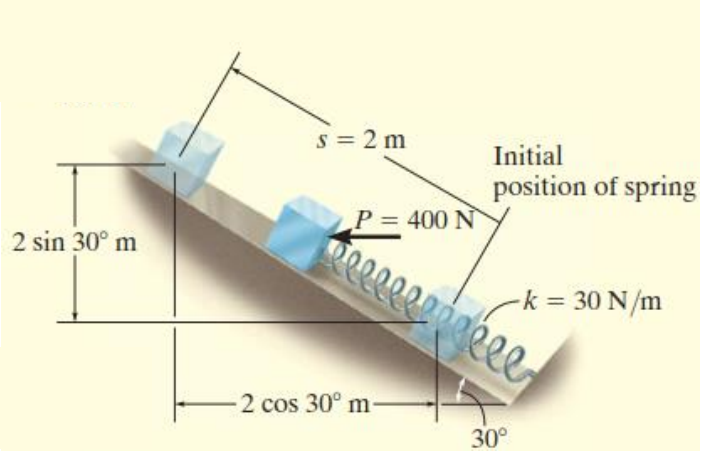

Kinetics: Work & Energy

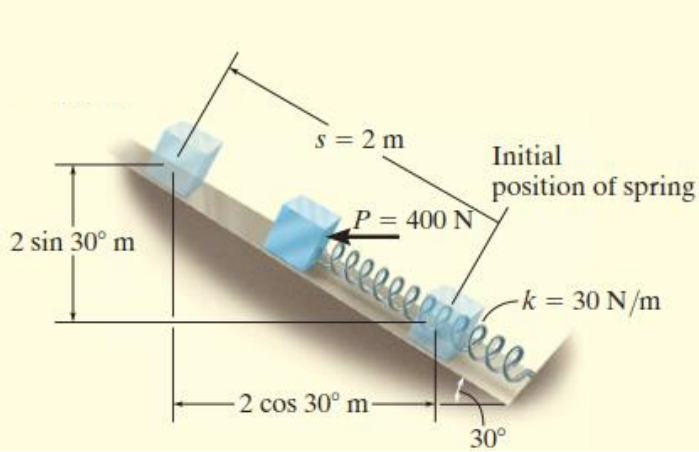

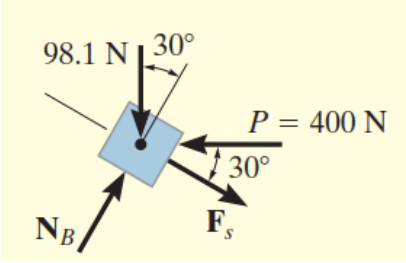

Horizontal Force *P*. Since this force is *constant*, the work is determined using Eq. 14–2. The result can be calculated as the force times the component of displacement in the direction of the force; i.e.,

$$U_P = 400\text{ N}\,(2\text{ m}\cos 30°) = 692.8\text{ J}$$

or the displacement times the component of force in the direction of displacement, i.e.,

$$U_P = 400\text{ N}\cos 30°(2\text{ m}) = 692.8\text{ J}$$

Kinetics: Work & Energy

Spring Force F_s. In the initial position the spring is stretched $s_1 = 0.5$ m and in the final position it is stretched $s_2 = 0.5\text{ m} + 2\text{ m} = 2.5$ m. We require the work to be negative since the force and displacement are opposite to each other. The work of $\mathbf{F}_s$ is thus

$$U_s = -\left[\tfrac{1}{2}(30\text{ N/m})(2.5\text{ m})^2 - \tfrac{1}{2}(30\text{ N/m})(0.5\text{ m})^2\right] = -90\text{ J}$$

Weight W. Since the weight acts in the opposite sense to its vertical displacement, the work is negative; i.e.,

$$U_W = -(98.1\text{ N})\,(2\text{ m}\sin 30°) = -98.1\text{ J}$$

Note that it is also possible to consider the component of weight in the direction of displacement; i.e.,

$$U_W = -(98.1\sin 30°\text{ N})\,(2\text{ m}) = -98.1\text{ J}$$

Normal Force N_B. This force does *no work* since it is *always* perpendicular to the displacement.

Total Work. The work of all the forces when the block is displaced 2 m is therefore

$$U_T = 692.8\text{ J} - 90\text{ J} - 98.1\text{ J} = 505\text{ J} \qquad \textit{Ans.}$$

Kinetics: Work & Energy

Principles of Work and Energy:

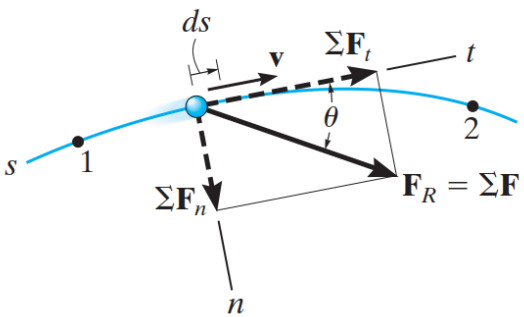

$$\Sigma \int_{s_1}^{s_2} F_t \, ds = \int_{v_1}^{v_2} mv \, dv$$

$$\Sigma \int_{s_1}^{s_2} F_t \, ds = \frac{1}{2}mv_2^2 - \frac{1}{2}mv_1^2$$

This equation represents the principle of work and energy for the particle.The term on the left is the sum of the work done by all the forces acting on the particle as the particle moves from point 1 to point 2. The two terms on the right side, which are of the form $T = \frac{1}{2}mv^2$ define the particle's final and initial kinetic energy, respectively. Like work, kinetic energy is a scalar and has units of joules (J). However, unlike work, which can be either positive or negative, the kinetic energy is always positive, regardless of the direction of motion of the particle.

Kinetics: Work & Energy

Principles of Work and Energy:

$$\boxed{T_1 + \Sigma U_{1-2} = T_2}$$

which states that the particle's initial kinetic energy plus the work done by all the forces acting on the particle as it moves from its initial to its final position is equal to the particle's final kinetic energy.

Kinetics: Work & Energy

Work of Friction Caused by Sliding

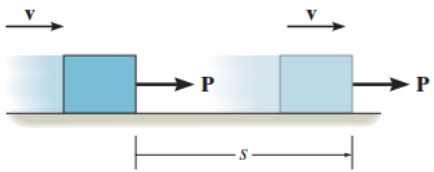

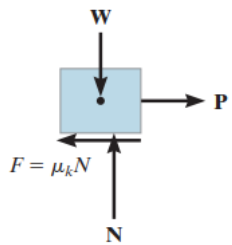

These problems involve cases where a body slides over the surface of another body in the presence of friction.

$$\frac{1}{2}mv^2 + Ps - \mu_k Ns = \frac{1}{2}mv^2$$

Indeed this equation is satisfied if however, as one realizes from experience, the sliding motion will generate heat, a form of energy which seems not to be accounted for in the work-energy equation. In order to explain this paradox and thereby more closely represent the nature of friction, we should actually model the block so that the surfaces of contact are deformable

Kinetics: Work & Energy

Numerical Example:

When the driver applies the brakes of a light truck traveling 10 km/h it skids 3 m before stopping. How far will the truck skid if it is traveling 80 km/h when the brakes are applied?

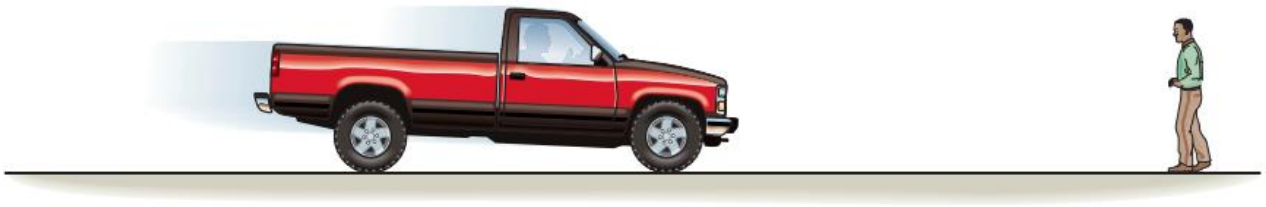

Kinetics: Work & Energy

$$10 \text{ km/h} = \frac{10(10^3)}{3600} = 2.778 \text{ m/s} \qquad 80 \text{ km/h} = 22.22 \text{ m/s}$$

$$T_1 + \Sigma U_{1-2} = T_2$$

$$\frac{1}{2} m(2.778)^2 - \mu_k mg(3) = 0$$

$$\mu_k g = 1.286$$

$$T_1 + \Sigma U_{1-2} = T_2$$

$$\frac{1}{2} m(22.22)^2 - (1.286)m(d) = 0$$

$$d = 192 \text{ m}$$

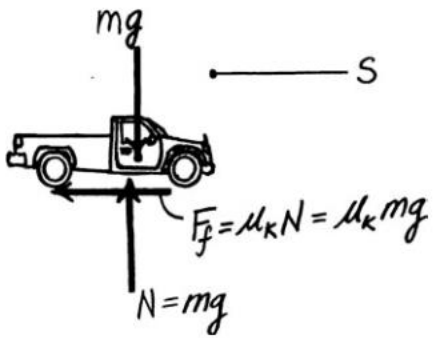

Kinetics: Work & Energy

Numerical Example:

The spring in the toy gun has an unstretched length of 100 mm. It is compressed and locked in the position shown. When the trigger is pulled, the spring unstretches 12.5 mm, and the 20-g ball moves along the barrel. Determine the speed of the ball when it leaves the gun. Neglect friction.

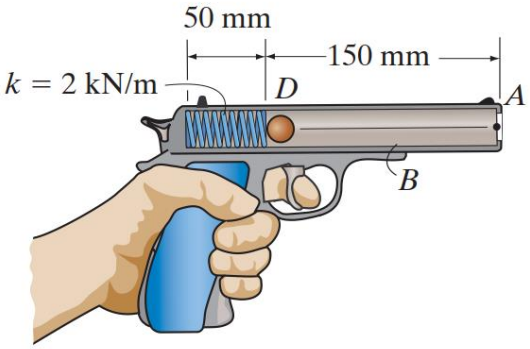

Kinetics: Work & Energy

Principle of Work and Energy: Referring to the free-body diagram of the ball bearing shown in Fig. *a*, notice that $\mathbf{F}_{sp}$ does positive work. The spring has an initial and final compression of $s_1 = 0.1 - 0.05 = 0.05$ m and $s_2 = 0.1 - (0.05 + 0.0125) = 0.0375$ m.

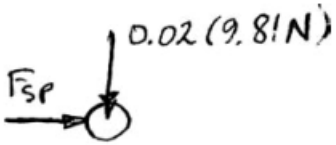

$$T_1 + \Sigma U_{1-2} = T_2$$

$$0 + \left[\frac{1}{2}ks_1^2 - \frac{1}{2}ks_2^2\right] = \frac{1}{2}mv_A^2$$

$$0 + \left[\frac{1}{2}(2000)(0.05)^2 - \frac{1}{2}(2000)(0.0375^2)\right] = \frac{1}{2}(0.02)v_A^2$$

$$v_A = 10.5 \text{ m/s}$$ **Ans.**

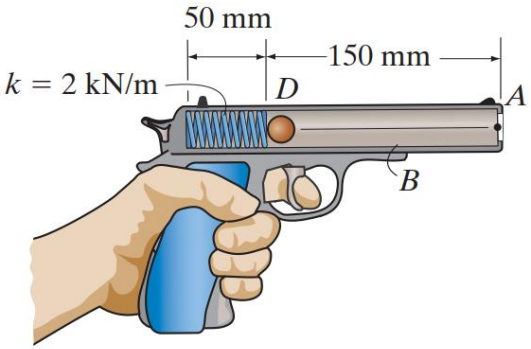

Kinetics: Work & Energy

Power & Efficiency

Power. The term "power" provides a useful basis for chosing the type of motor or machine which is required to do a certain amount of work in a given time. For example, two pumps may each be able to empty a reservoir if given enough time; however, the pump having the larger power will complete the job sooner.

$$\boxed{P = \frac{dU}{dt}} \qquad P = \frac{dU}{dt} = \frac{\mathbf{F} \cdot d\mathbf{r}}{dt} = \mathbf{F} \cdot \frac{d\mathbf{r}}{dt} \qquad \boxed{P = \mathbf{F} \cdot \mathbf{v}}$$

Hence, power is a scalar, where in this formulation v represents the velocity of the paticle which is acted upon by the force F

$$1\ \mathrm{W} = 1\ \mathrm{J/s} = 1\ \mathrm{N \cdot m/s} \qquad 1\ \mathrm{hp} = 746\ \mathrm{W}.$$

Kinetics: Work & Energy

Power & Efficiency

Efficiency. The mechanical efficiency of a machine is defined as the ratio of the output of useful power produced by the machine to the input of power supplied to the machine. Hence,

$$\epsilon = \frac{\text{power output}}{\text{power input}}$$

$$\epsilon = \frac{\text{energy output}}{\text{energy input}}$$

Since machines consist of a series of moving parts, frictional forces will always be developed within the machine, and as a result, extra energy or power is needed to overcome these forces. Consequently, power output will be less than power input and so the efficiency of a machine is always less than 1

Kinetics: Work & Energy

Numerical Example:

The man in Figure pushes on the 50-kg crate with a force of F =150 N Determine the power supplied by the man when t = 4s. The coefficient of kinetic friction between the floor and the crate is μk = 0.2. Initially the create is at rest.

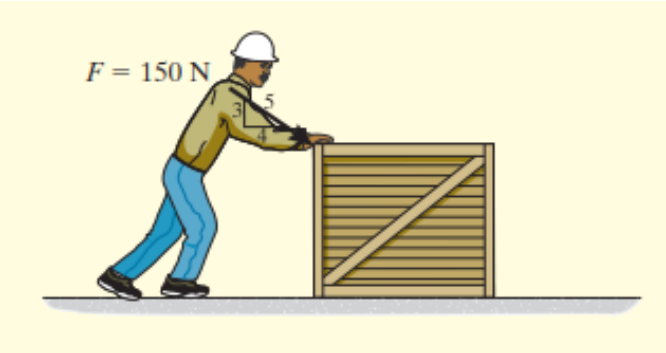

Kinetics: Work & Energy

SOLUTION

To determine the power developed by the man, the velocity of the 150-N force must be obtained first. The free-body diagram of the crate is shown in Fig. 14–15*b*. Applying the equation of motion,

$$+\uparrow \Sigma F_y = ma_y; \qquad N - \left(\tfrac{3}{5}\right)150\text{ N} - 50(9.81)\text{ N} = 0$$

$$N = 580.5\text{ N}$$

$$\overset{+}{\rightarrow} \Sigma F_x = ma_x; \qquad \left(\tfrac{4}{5}\right)150\text{ N} - 0.2(580.5\text{ N}) = (50\text{ kg})a$$

$$a = 0.078\text{ m/s}^2$$

The velocity of the crate when $t = 4$ s is therefore

$$(\overset{+}{\rightarrow}) \qquad v = v_0 + a_c t$$

$$v = 0 + (0.078\text{ m/s}^2)(4\text{ s}) = 0.312\text{ m/s}$$

The power supplied to the crate by the man when $t = 4$ s is therefore

$$P = \mathbf{F}\cdot\mathbf{v} = F_x v = \left(\tfrac{4}{5}\right)(150\text{ N})(0.312\text{ m/s})$$

$$= 37.4\text{ W} \qquad \textit{Ans.}$$

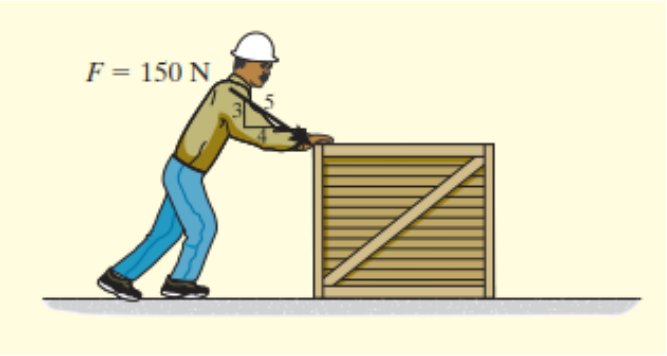

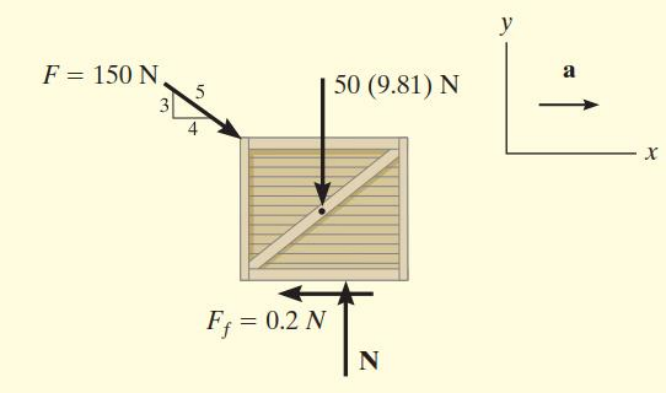

Kinetics: Work & Energy

Numerical Example:

The diesel engine of a 400-ton train increases the train's speed uniformly from rest to 10 m/s in 100 s along a horizontal track. Determine the average power developed.

Kinetics: Work & Energy

$$T_1 + \Sigma U_{1-2} = T_2$$

$$0 + U_{1-2} = \frac{1}{2}(400)(10^3)(10^2)$$

$$U_{1-2} = 20\,(10^6)\ \text{J}$$

$$P_{avg} = \frac{U_{1-2}}{t} = \frac{20(10^6)}{100} = 200\ \text{kW}$$

Also,

$$v = v_0 + a_c t$$

$$10 = 0 + a_c\,(100)$$

$$a_c = 0.1\ \text{m/s}^2$$

$$\xrightarrow{+} \Sigma F_x = ma_x; \qquad F = 400(10^3)(0.1) = 40(10^3)\ \text{N}$$

$$P_{avg} = \mathbf{F}\cdot\mathbf{v}_{avg} = 40\,(10^3)\left(\frac{10}{2}\right) = 200\ \text{kW}$$

Ans.

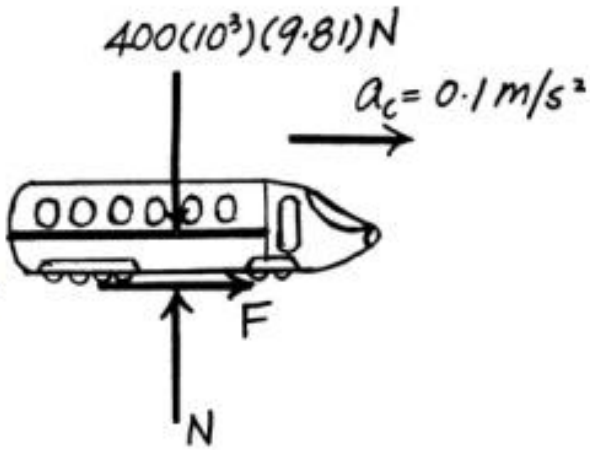

Kinetics: Work & Energy

Numerical Example:

The material hoist and the load have a total mass of 800 kg and the counterweight C has a mass of 150 kg. At a given instant, the hoist has an upward velocity of 2 m/s and an acceleration of 1.5 m/s^2. Determine the power generated by the motor M at this instant if it operates with an efficiency of ϵ = 0.8.

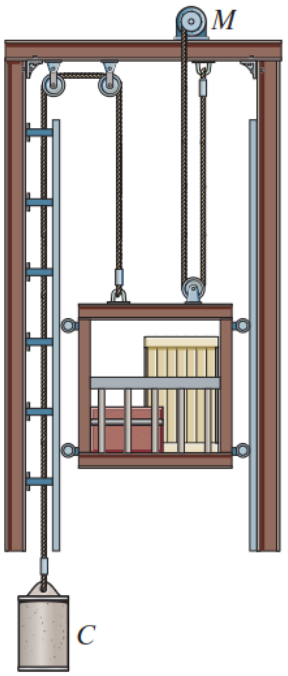

Kinetics: Work & Energy

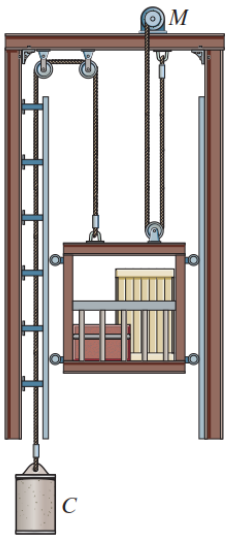

$$+\uparrow \Sigma F_y = ma_y; \qquad 2T + T' - 800(9.81) = 800(1.5)$$

$$+\downarrow \Sigma F_y = ma_y; \qquad 150(9.81) - T' = 150(1.5)$$

Solving,

$$T' = 1246.5 \text{ N}$$

$$T = 3900.75 \text{ N}$$

Power:

$$P_{out} = 2\mathbf{T} \cdot \mathbf{v} = 2(3900.75)(2) = 15\,603 \text{ W}$$

Thus,

$$P_{in} = \frac{P_{out}}{\varepsilon} = \frac{15603}{0.8} = 19.5(10^3) \text{ W} = 19.5 \text{ kW}$$

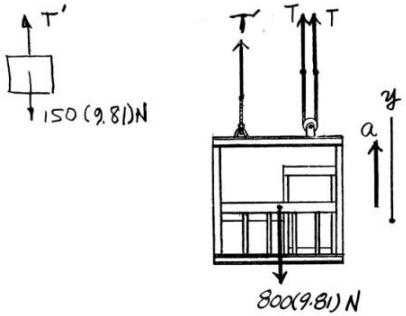

Kinetics: Work & Energy

Numerical Example:

The 1.2-ton mine car is being pulled by the winch M mounted on the car. If the winch generates a constant power output of 30 kW, determine the speed of the car at the instant it has traveled a distance of 30 m, starting from rest.

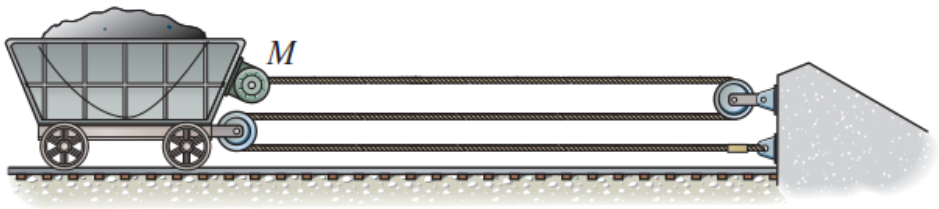

Kinetics: Work & Energy

Equations of Motion: Here, $a = v\dfrac{dv}{ds}$. By referring to the free-body diagram of the mine car shown in Fig. *a*,

$$\xrightarrow{+} \Sigma F_x = ma_x; \qquad 3F = 1200\left(v\frac{dv}{ds}\right) \qquad \textbf{(1)}$$

Power:

$$P_{\text{out}} = 3\mathbf{F}\cdot\mathbf{v}$$

$$30(10^3) = 3Fv \qquad \textbf{(2)}$$

Substituting Eq. (1) into Eq. (2) yields

$$30(10^3) = 1200\left(v\frac{dv}{ds}\right)v$$

$$\int_0^v v^2 dv = \int_0^{30\text{ m}} 25ds$$

$$\left.\frac{v^3}{3}\right|_0^v = \left.25s\right|_0^{30\text{ m}}$$

$$v = 13.1\text{ m/s} \qquad \textbf{Ans.}$$

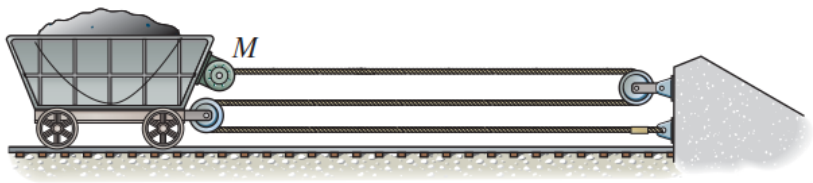

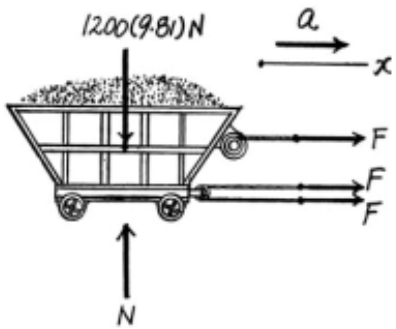

Kinetics: Work & Energy

Energy:

Conservative Force. If the work of a force is independent of the path and depends only on the force's initial and final positions on the path, then we can classify this force as a conservative force. Examples of conservative forces are the weight of a particle and the force developed by a spring. The work done by the weight depends only on the vertical displacement of the weight, and the work done by a spring force depends only on the spring's elongation or compression.

In contrast to a conservative force, consider the force of friction exerted on a sliding object by a fixed surface. The work done by the frictional force depends on the path—the longer the path, the greater the work. Consequently, frictional forces are nonconservative. The work is dissipated from the body in the form of heat.

Kinetics: Work & Energy

Energy:

Energy. Energy is defined as the capacity for doing work. For example, if a particle is originally at rest, then the principle of work and energy states that $\Sigma U_{1\to 2} = T_2$. In other words, the kinetic energy is equal to the work that must be done on the particle to bring it from a state of rest to a speed v. Thus, the *kinetic energy* is a measure of the particle's *capacity to do work*, which is associated with the *motion* of the particle. When energy comes from the *position* of the particle, measured from a fixed datum or reference plane, it is called potential energy. Thus, *potential energy* is a measure of the amount of work a conservative force will do when it moves from a given position to the datum. In mechanics, the potential energy created by gravity (weight) or an elastic spring is important.

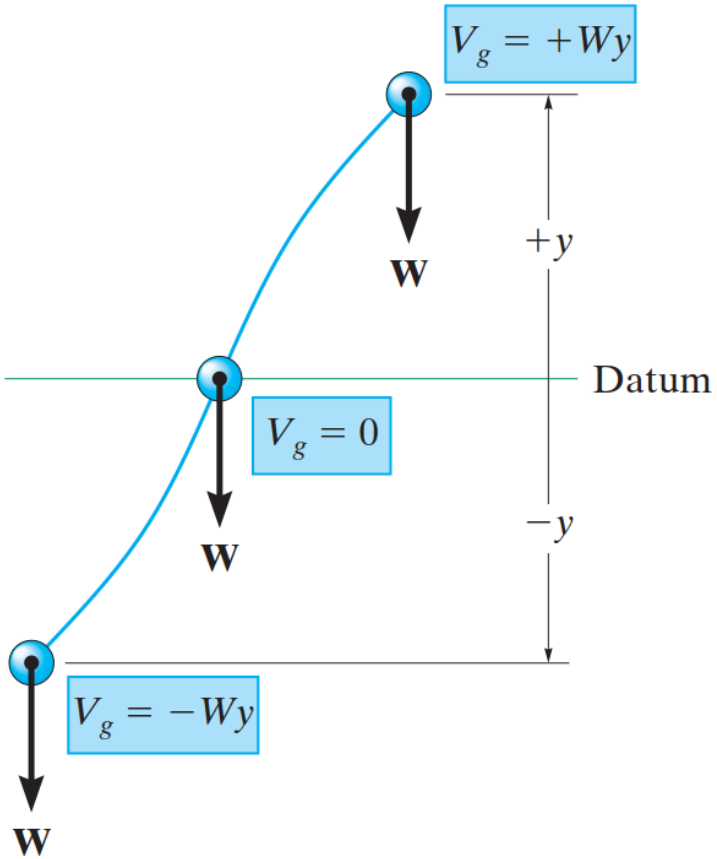

Kinetics: Work & Energy

Energy:

Elastic Potential Energy. When an elastic spring is elongated or compressed a distance s from its unstretched position, elastic potential energy can be stored in the spring. This energy is

$$V_e = +\tfrac{1}{2}ks^2$$

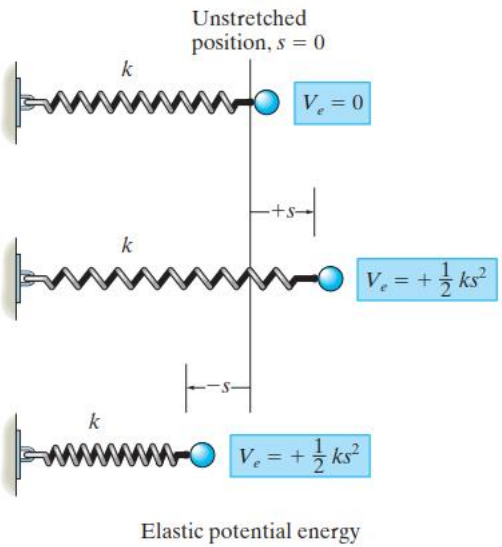

Kinetics: Work & Energy

Conservation of Energy:

When a particle is acted upon by a system of both conservative and nonconservative forces, the portion of the work done by the conservative forces can be written in terms of the difference in their potential energies.

$$\boxed{T_1 + V_1 = T_2 + V_2}$$
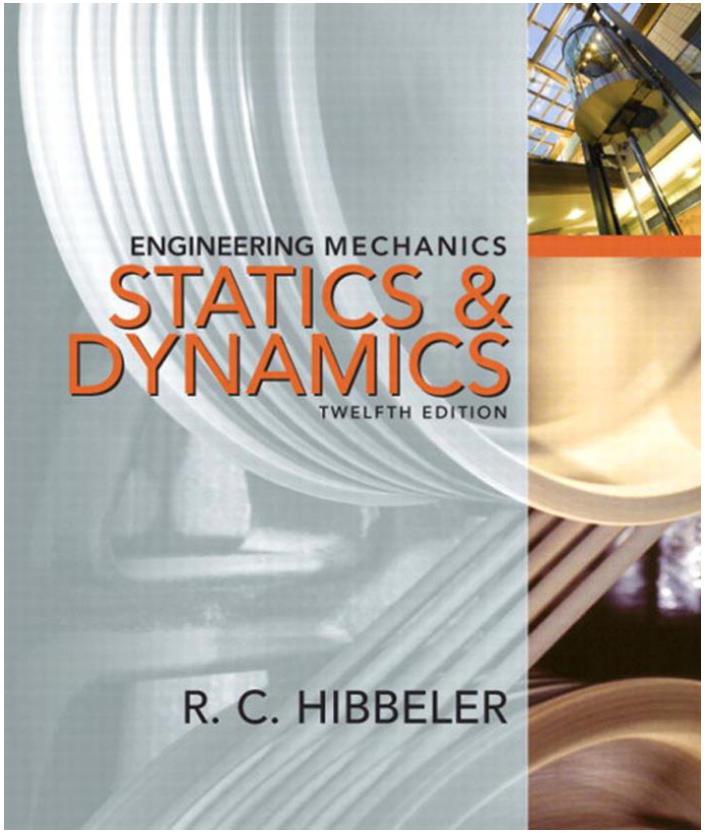
Course Reference: